QUESTION BANK

Name of the Department : Electrical and Electronics Engineering

Subject Code & Name : EE8010 & Power Systems Transients

Year & Semester : IV & VII

UNIT I INTRODUCTION TO SURVEY

PART-A

1.Define transient.
The power system transient is the outward manifestation of a sudden change in circuit conditions as when a switch opens or closes or a fault occurs on a system.

2.What are the causes of transients?
The various causes of transients can be classified as
- Internal causes (device switching and arcing)
- External causes (lightning and poor electrical connections)

Internal Causes:	External Causes:
Facility load switches	Lightning strikes
On/off disconnects	Poor or loose connection
Capacitor banks switch	Accidents and Human error.
Tap changing (transformers)	Weather and animals

3.What are the effects of transients in power systems?
- Under severity, black out of power system will be produced.
- Lightning transient produced steep fronted wave on transmission line.
- Travelling wave produced due to transient will shutter the insulations and week poles.
- Cause damage to windings of transformer and generators.

4.Write down the importance of transient study in power system planning.
- Designing and planning
- If severe transients occurred it would end up with partial block-out or total block-out.
- Switching transients geared to the system voltage cause severe damage.
- For economic reason also we have to limit and control the switching surges.
- The transients produced in one region travel towards the remote end and cause difficulties at that region also. Since integrated power system is required.

5.List the types of power system transients.
1. Ultra transients 2. Medium fast transients 3. Slow transients
Power system transients based on waveform shapes can be classified in to “oscillator transients” and “impulsive transients” and “Multiple transients”

6.Draw the double frequency transient with an example.

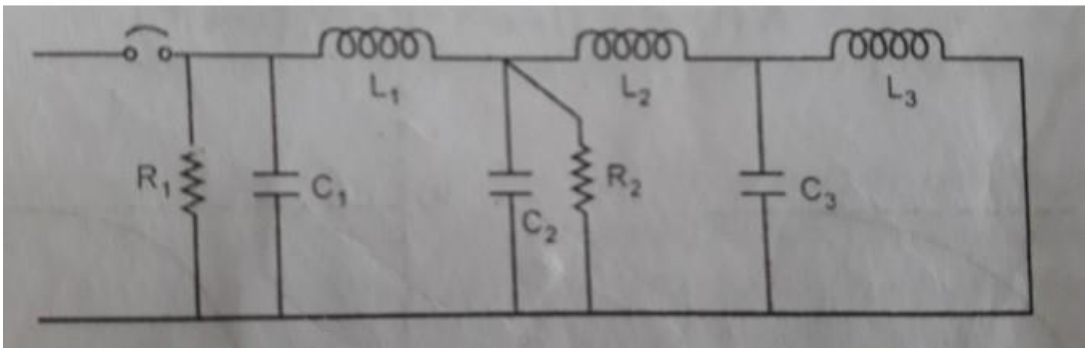

To determine the recovery transient voltage we have to analysis the circuit. If it is possible to find the source side transient and load side transient ans circuit with natural frequencies.

7.A power transformer draws a heavy magnetizing inrush current. Now this current is suddenly interrupted before it reaches natural zero by means of a circuit breaker. What would happen between the contacts of circuit breaker? What do you call this phenomenon?

Current Chopping.

8.Write the basic transform of RLC circuit transient.

IL(s) = Vc (0)/L. 1/s2+s / Tp+1/T2

9.Draw the TRV wave form across the circuit breaker following the interruption of fault current.

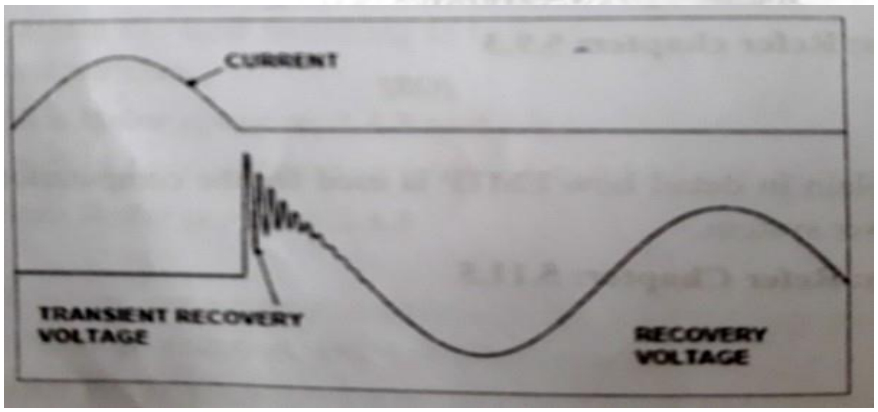

10.Write the mathematical expression for RLC circuit transient.

i(t) = e-α t (B1 cosω dt + B2 sin ω dt)

V(t) = (A1cosω dt + A2 sin ω dt) for parallel circuit.

11.Find the Laplace transform of 1/s (s+a) .

1/s(s+α) = 1/s . 1/s+α

Inverse Laplace Transform for 1/s(s+α) = 1 . e ---α t = e ---α t

12.Define transient recovery voltage.
A transient voltage is developed across the contacts of a switch when they start to open. This voltage, known as transient recovery voltage (TRV), is present immediately after the current zero, and in actual system its duration is in the order of milliseconds.

13.What is ground wire?
Ground wire is a conductor run parallel to the main conductor of the transmission line supported on the same tower and earthed at every equally and regularly spaced towers. It is run above the main conductor of the line.

14.Define power system transient.
As per the classic definition in concerned, an instantaneous change in the state leading to a burst of energy for a limited time is termed as a transient event. The causes can be both internal and external, with the aftermath being sequential and affecting the other parts too. As per classification, we have the impulsive and oscillatory transients.

15.What are the types of power system Transients?
(a) Based upon origin (b) Based upon the made of generation of transients
(c) Based on transient classification with respect to the frequency group
(d) Classification of transients on frequency ranges
(e) Classification depending on its nature (f) Classification depends on control on t Transients (g) How and where transients are generated,(h) Effects of lightning transients.

16. Interpret the concept of resonant frequency of a system.
Resonant frequency is the oscillation of a system at its natural or unforced resonance. Resonance occurs when a system is able to store and easily transfer energy between different storage modes, such as Kinetic energy or Potential energy as you would find with a simple pendulum.

17. Give example for internal sources for transients.
Internal Sources:
The vast majority of transients are produced within your own facility. The main culprits are device switching, static discharge, and arcing. Each time you turn on, turn off, load, or unload an inductive device, you produce a transient. ... Examples of inductive loads are motors and transformers.

18. Give example for external sources for transients.
External sources include lightning (LEMP), electrostatic discharge (ESD) and nuclear EMP (NEMP). Within Electromagnetic compatibility testing, transients are deliberately administered to electronic equipment for testing their performance and resilience to transient interference.

19. What are the common sources of transient overvoltages?
There are two main sources of transient overvoltages on utility systems: capacitor switching and lightning. These are also sources of transient overvoltages as well as a myriad of other switching phenomena within end-user facilities. Some power electronic devices generate significant transients when they switch.

20. What are the two main reasons cause transient overvoltages in a power system?
The two major causes of transient overvoltages, lightning surges and switching surges, have been identified with greater precision in low-voltage ac circuits as well as in communication systems.

21. What are different overvoltage transients in transmission line?
There are two different types of transient overvoltages: low frequency transients with frequency components in the few-hundred-hertz region typically caused by capacitor switching, and high-frequency transients with frequency components in the few-hundred-kilohertz region typically caused by lighting.

22. What is surge voltage?
In general a surge is a transient wave of current, voltage or power in an electric circuit. In power systems in particular – and this is likely the most common context that we relate surges to – a surge, or transient, is a subcycle overvoltage with a duration of less than a half-cycle of the normal voltage waveform.

23. What is the difference between surge and spike?
Power spikes are very short pulses of energy on a power line and contain very high voltages. ... Power surges are a temporary increase in a voltage on a power line. Typically surges have less voltage than spikes, however they last much longer and sometimes can surges are preceded by spikes.

24. What is the difference between surge protector and voltage stabilizer?
It has shown how stabilizers only regulate voltage and ensure consistent supply, while surge protectors also prevent the damage that high voltage may cause to the electric appliances. While the stabilizers are sufficient for small devices, surge protectors are necessary for your expensive electric appliances.

25. How do I protect my home appliances from High Voltage?
Here are some tips on how to protect your house and electrical appliances from a power surge.

1. Install a Whole-House Surge Protector. ...
2. Have Added Protection for Specific Devices. ...
3. Upgrade Your AC Unit. ...
4. Unplug Devices During a Storm. ...
5. Inspect Your Wiring.

PART-B

1.Discuss in detail about the adverse effect of transients on power systems.
2. Write short notes on RLC circuit transient.
3.What are the various types of power system transients and explain any two types of power system transients. Depending upon the duration of transients they can be broadly classified in to three groups.
4. Explain the double frequency transients with necessary diagrams.

5. Briefly explain the importance of study of transients in planning.
6. Examine the sources of transients? Also explain how transients affect the power systems.
7. Derive the expression for RL circuit transient with sine wave excitation.
8. Explain the Transients associated with switching an LC circuit with sine wave excitation.
9. Briefly explain about lightning transients.
10. Explore the classifications of power system transients?

UNIT II SWITCHING TRANSIENTS

PART-A

1.What is current chopping?

When interrupting low inductive currents such as magnetizing currents of the transformer shunt reactor, the rapid deionization of the contact space and blast effect may cause the current to be interrupted before the natural current zero. This phenomenon of interruption of the current before its natural zero is called current chopping.

2.What do you mean by ferroresonance?

Ferro resonance or non linear response is a type of resonance in electric circuits which occurs when a circuit containing a non-linear inductance is fed from a source that has series capacitance, and the circuit is subjected to a disturbance such as opening of a switch.

3.What is resistance switching?

A deliberate connection of a resistance in parallel with the contact space
(arc) is made to overcome the effect of transient recovery voltage. This is known as resistance switching.

4.What is the need for resistance switching?

The shunt resistors are connected across circuit breaker have two functions.

- To distribute the transient recovery voltage more uniformly across the several breaks.
- To reduce the severity of transient recovery voltage at the time of interruption by introducing damping in to oscillation.

5.What is current suppression?

When interrupting low inductive currents such as magnetizing currents of the shunt reactor, the rapid deionization of the contact space and blast effect may cause the current to be interrupted before the natural current zero. This phenomenon of interruption of the current before its natural zero is called current chopping(or) Current suppression.

6.What is meant by abnormal switching transients?

Due to some other circumstances like transients the voltage and current magnitude may rise high. The transient occur due to the trapping of the energy and its subsequent release somewhere in the circuit. Such transients are referred as abnormal current and voltage transients.

7.Where do double restrike transients arise? What are their implications?

When the switch operates in such a circuit it completely divorcés the load from the supply. There after the two halves of the circuit behave independently.

8.Give a power system example for the occurrence of ferroresonance.

1. Opening one (or) two phases, either intentionally (or) accidently
2. The cable system had either light load (or) no load.
3. Common place UD cable service drop from an overhead line.

9.Sketch the restrike waveform of the capacitance switching.

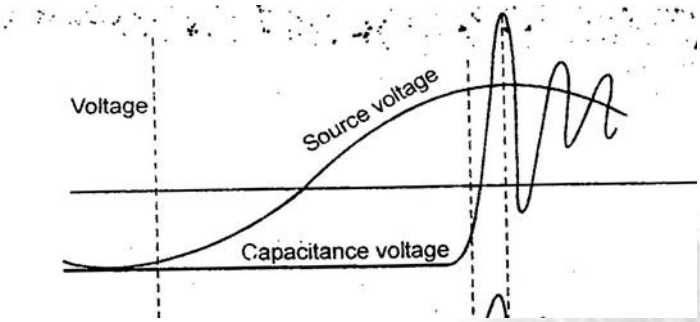

10.What is the origin of ferro-resonance? What are the undesirable effects?

Origin: Non-linear inductance and capacitive components.
Effects: Generation of harmonics the order of harmonics are 5th (or) higher harmonics.

11.Draw the resistance switching circuit.

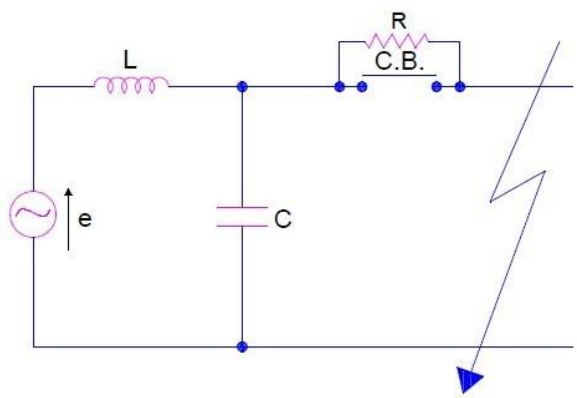

12.Why multiple restrike occur due to capacitance switching?

Some capacitance will exist on the source side of the breaker which will introduce higher frequency disturbances. So multiple restrike occur during capacitance swiching.

13.What is meant by multiple restriking transients?

When a couple of re-ignitions occur is called multiple restrike, very high voltages build up across the interrupting chamber, and it is most likely that a flashover takes place on the outside chamber of the interrupter.

14.Differentiate normal and abnormal switching transients.

Normal switching transients are circumstances in which voltage or current within the normal peak values Closing switch or circuit in a dominantly capacitive or inductive network results in inrush currents which can cause problems for the protection system.

Abnormal switching transients are circumstances in which voltage or current are far in excess of twice in normal peak values. Insulation of high voltage circuit breakers typically can over voltages up to 2.5 times over its normal voltage.

15.What is capacitance switching?

The shunt capacitors are employed to correct a lagging power factor, or in some cases, to provide support for the system. In some applications they are switched in and out quite frequently as the system load varies and the system voltage fluctuates.

16.Define arcing ground.

If neutral of three phase wires was not earthed in long enough voltage transmission lines a serious problems called acing ground is produced. The arcing ground produces severe oscillations of three to four times the normal voltage.

17.What does the phenomenon of current suppression lead to?

Rapid deionization of contact space and may cause the current to be interrupted its natural zero.

18.What is meant by switching surges?

The disturbance produced by the switching operation in a system which sets up travelling wave which travel along the connected lines to and fro. These disturbances are called switching surges.

19. Define load switching.

Integrated load switches are electronic switches that can be used to turn on and turn off power supply rails. in systems, similar to a relay or a discrete FET. Load switches offer many other benefits to the system. some including protection features that are often difficult to implement with discrete.

20. Outline the need for resistance switching?

Resistance switching is employed in circuit breakers having a high post zero resistance of contact space. The resistance switching is mainly used for reducing the restriking voltage and the transient voltage surge. ... The severe voltage may endanger the operation of the system.

21. Discuss the following TRV, RRRV.

The Rate of Rise of Recovery Voltage (RRRV) is defined as peak transient recovery voltage divided by the total time from zero voltage to peak voltage. end to far end of line, changing line Susceptance to higher voltage levels just before current break, increasing the TRV on the line-side of the LCB.

22.Show the objectives of switching a capacitor bank.

Store Energy: Like individual capacitors, capacitive banks store electric energy when it is connected to a charging circuit and release that energy when discharged. Capacitors are commonly used in electronic devices to maintain power supply while batteries are being changed.

23. Discuss about current chopping in AC system.
Current Chopping in circuit breaker is defined as a phenomena in which current is forcibly interrupted before the natural current zero. Current Chopping is mainly observed in Vacuum Circuit Breaker and Air Blast Circuit Breaker. ... Current chopping is predominant while switching Shunt Reactor or unloaded Transformer.

24. Differentiate normal and abnormal switching transients.
Abnormal switching transients are circumstances in which voltage or current are far in excess of twice in normal peak values. Insulation of high voltage circuit breakers typically can over voltages up to 2.5 times over its normal voltage.

25. Interpret reason for occurrence of restriking when Circuit breaker contacts open during the fault.
When the fault occurs in the system under fault condition the contacts of the breaker are open, and the capacitance C is short-circuited by the fault.

PART-B

1. Examine the phenomenon in switching transient.
2. With neat diagram explain the concept of load switching.
3. Differentiate between normal and abnormal switching transients in load switching.
4. Discuss the control of transient over voltages in power system.
5. What is meant by current suppression? Explain the concept in an unloaded transformer with relevant wave forms.
6. Explain the control of switching surges and high light how switching surges affects capacitive Current.
7. With neat sketch explain the capacitance switching multiple restrikes.
8. With suitable example explain the concept of ferro resonance.
9. Discuss (i) Current Chopping (ii) Resistance Switching.
10. Discuss about current suppression.

UNIT III LIHTNING TRANSIENTS

PART-A

1.What is the significance of tower footing resistance?
- A low value of tower footing resistance results in less voltage stresses across line insulation
- A tower footing resistance of 20Ω for EHV lines and 10Ω for HV lines provides sufficient lightning protection.

2.What is tower footing resistance?

Tower footing resistance is the resistance offered by tower footing to the dissipation of current. The effective of a ground wire depends to a large extend on the lower footing resistance.

3.What is ground wire?

It is the conductor run parallel to the main conductor of the transmission line supported on the same tower and earthed at every equally regularly spaced tower. It is run above the main conductor of the line.

4.How would you modeling a lightning strike?

The modeling of lightning strike behavior and estimation of the subsequent electric discharge is of great practical importance. In this study, a complete two- dimensional physics-based analytic formulation is presented for elevated grounded systems that can be envisioned to be contained within two non- concentric circular domains.

5.Write the equation for tower footing resistance.

Resistance = p s/ 2πR, R = radius of sphere.

6.What is called charge formation?

During thunderstorms positive and negative charge becomes separated by the heavy air currents with ice crystals in the upper part and rain in the lower part of the cloud. This charge separation depends on the height of clouds which range from 0.2 t 10Km with their charge centers probably at a distance of about 0.25 to 2Km.

7.What are the protective devices used to protect power system equipments against lightning?

(a) Ground wires (d) Rod Gaps (g) Expulsion gaps
(b) Surge arresters(e) Surge arresters
(c) Protective tubes (f) Protective tubes

8.What are the properties of good transmission line?

(a) Reduce the number of outages
(b) High ground impedance or tower footing resistance is to be avoided
(c) Incidence of strokes
(d) High surge impedance in ground wires, tower structures are to be avoided.

9.Define isokeraunic level or thunderstorm days.

It is the number as the number of days in a year when the thunder is heard recorded in a Particular location.Often it does not distinguish between the ground strokes and the cloud-cloud strokes.110 state the factors influence the lightning induced voltages on transmission lines. The ground conductivity, the leader stroke current and the corona.

10.What are the types of protection afforded by ground wires?

A shield wire reduce the magnitudes of the over voltage associated with nearby strokesAs this effect is due to the coupling between the shield and phases wires, the voltage reduction will occur regardless of the position of the shield wire with respect to the phase conductors.The greater the coupling, the more significant is the voltage reduction. The

effectiveness of the shield wires in improving the indirect lightning performance of distribution lines.

11.What is the rate of charging of thunder clouds?

This equation gives rate of charging of thunder Qs h clouds

Qg = Qs h / v/λ[1-e-λt]

12.Mention any two factors which are contributing to good line design.

- We try to keep the incidence of strokes to the system to a minimum.
- The objective of good line design is to reduce the number of outages caused by lightning.

13.Differentiate between direct and indirect lightning stroke.

Direct lightning stroke is the one which strikes either the phase conductors or the tower or shield (ground wire generates very high voltages in the power lineIndirect lightning stroke is a very high voltage can be generated in the power line due to the stroke which hits the nearby ground. Such strokes are called indirect lightning stroke or induced lightning stroke.

14. List out the important characteristics of the lightning strokes.

The parameters and Characteristics of Lightning Strokes include the **amplitude** of the currents, the rate of rise, the probability **distribution** of the above, and the waveshapes of the lightning voltages and currents.

15. Outline the concept of charge formation.

Charging means gaining or losing electron. Matters can be charged with three ways, charging by friction, charging by contact and charging by induction. Charging by Friction. When you rub one material to another, they are charged by friction.

16. Discuss about insulation failure.

One of the main causes of failure of a transformer is the insulation failure. The purpose of the insulation is to prevent the flow of electric current between points of different potential in an electrical system. Failure of insulation is one of the most common failures in an electrical equipment.

17.Explore the necessity of insulation co-ordination.

In power system and transmission networks, insulation is provided to the all equipment and components. ... The overall aim of insulation coordination is to reduce to an economically and operationally acceptable level the cost and disturbance caused by insulation failure.

18. Explain the various regions of cloud.

The simplest explanation is that a “cloud region” describes the actual, real-life geographic location where your public cloud resources are located. ... They're data centers, and those data centers live in places.

19. Explore the concept of back flashover.

Back flashover occurs when lightning stroke terminates on the overhead ground wire or tower. A stroke that so terminates forces currents to flow down the tower and out on the

ground wires. ... The objective is to protect the power system equipments from Back flashover.

20. Define isokeraunic level (or) thunder storm days.

It is defined as the number of days in a year when the thunder is heard or recorded in a particular location. Often it does not distinguish between the ground strokes and the cloud-to-cloud strokes.

21. Show the objectives of ground wire.

The purpose of a ground wire is to give excess electrical charges a safe place to go. The solid mass of earth below our feet has a negative electrical charge, which means positive electrical charges are naturally attracted to it.

22. What are the characteristics of lightning stroke?

The parameters and Characteristics of Lightning Strokes include the amplitude of the currents, the rate of rise, the probability distribution of the above, and the waveshapes of the lightning voltages and currents.

23. What causes lightning?

Lightning is an electrical discharge caused by imbalances between storm clouds and the ground, or within the clouds themselves. Most lightning occurs within the clouds. ... Lightning is extremely hot—a flash can heat the air around it to temperatures five times hotter than the sun's surface.

24. How does lightning work diagram?

When the positive and negative charges grow large enough, a giant spark - lightning - occurs between the two charges within the cloud. This is like a static electricity sparks you see, but much bigger. Most lightning happens inside a cloud, but sometimes it happens between the cloud and the ground.

25. What is the difference between positive and negative lightning strikes?

Less than 5 to 10 percent of lightning strikes are positive. The rest are negative. ... Positive lightning carries a much greater charge and a longer flash duration than negative lightning, reaching up to 1 billion volts and 300,000 amps, compared with 300 million volts and 30,000 amps with negative lightning.

PART-B

1.i)Sketch the characteristics of lightning stroke.
ii)Explain the formation thunder clouds with the aid of various theories.
2. Analyze the factors that contribute to good line design.
3. Evaluate the interaction between lightning and power system.
4. Derive an expression for the mathematical model for lightning.
5. Explain the mechanism of lightning discharge and concept of footing resistance.
6. i)What are the factors that contribute to good line design? Discuss in detail
ii)How the ground wires protect the transmission line from lightning transients ?Explain
7.What are the two theories of charge formation in the clouds explain them in detail.
8. Explain about grounding a line structure and protection offered by ground wires.

9. Explain direct lightning strokes to overhead lines, with and without shield wires.
10. Explain the mechanisms by which lightning strokes develop and induce over voltages on overhead power line.

UNIT IV TRAVELING WAVES ON TRANSMISSION LINE COMPUTATION OF TRANSIENTS

PART-A

1.Define lumped parameters.
The lumped element (also called lumped parameters (or) lumped components) simplifies the description of the behavior of spatially distributed physical system in to a topology Consisting of discrete entities that a approximate the behavior of the distributed system under certain assumptions.

2.What are the specifications of travelling wave?
A travelling wave is characterized by the four specifications Crest of a wave, Front of a wave, Tail of a wave and polarity.

3.What is the importance of Bewley's Lattice diagram?
In a complex electrical network with number of interconnections and with various terminations, the travelling wave initiated by single incident wave will upstart with a considerable rate as the wave splits. Due to this multiple reflection occur. It is possible for the voltage to build up certain points by the reinforcing action of several waves. In order to study such effects, Bewley proposed transient

4.Draw the equivalent circuit for an infinitesimal element of a line.

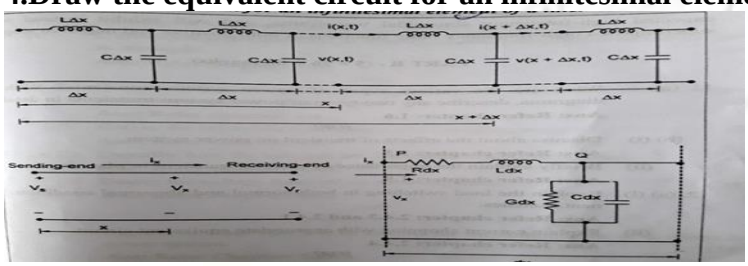

5.What are the standing waves?
A standing wave, also known as stationary wave, is a wave that remains in a constant position. This phenomenon can occur because the medium is moving in the opposite direction to the wave, or it can arise in astationary medium as a result of interference between two waves travelling in opposite directions.

6.What is attenuation? How they are caused?
The decrease in the magnitude of the wave as a propagates along the line is called attenuation. It is caused due to the energy loss in the line.

7.Draw the neat sketch of Bewley,s Lattice diagram.

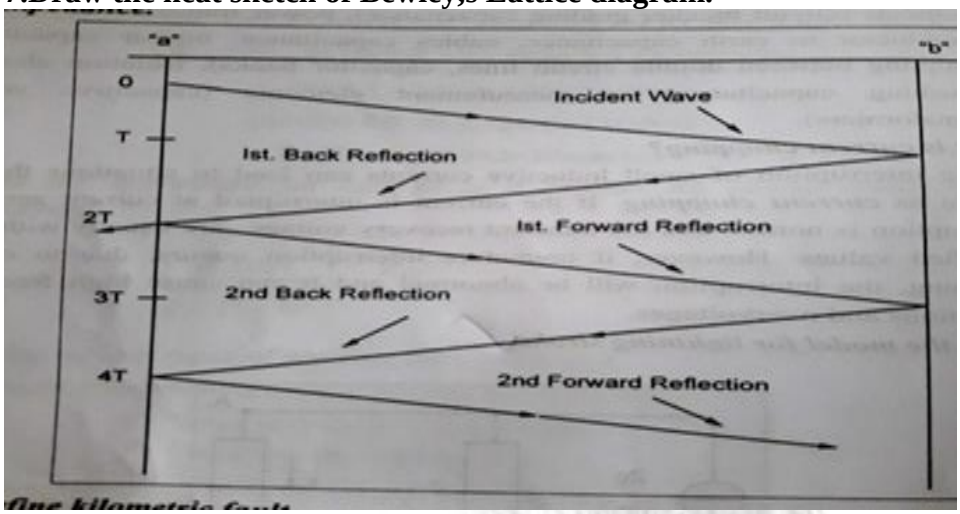

8.What are the damages caused by the travelling waves?

The high peak (or) crest voltage of the surge may cause Flashover in the internal winding their by spoil the windings insulation. The steep wave front of the surge may cause internal flashover between their turns of the transformer.

9.Define crest and front of a travelling wave.

Crest:The crest of the wave is maximum amplitude of the wave and is usually expressed in KV (or) KA.

Front: The front of the wave is the portion of the wave before crest and is expressed in time from beginning of the wave to the crest value in ms (or) µs.

10.What is travelling wave? What is the role of distributed parameters (R,L,C) in it.

Any disturbance on a transmission line (or) system such as sudden opening or closing of the line, short circuit or s fsult results in the development of over voltages or over current at that point. The disturbance propagaef as a travelling wave to the ends of a line or transmission , such as a substation.

11.Define attenuation and distortion.

The decrease in the magnitude of The wave at a propagates along the line is called attenuation. The elongation or change of wave shape that occurs called distortion.

12.Distinguish between reflection and refraction of travelling waves with expressions.

a= [ZB – ZA / ZA+ZB]and is called the reflection coefficient $1 \leq a \leq +1$

b= [2ZB / ZB + ZA] and is called the refraction coefficient

13.What are the principles are observed in Bewley's lattice d iagram.

All waves travel down hill (i.e) in to the positive time. The position of the wave at any instant is given by the means of the time scale at the left of the lattice diagram.

14.Define coefficient of reflection.
The coefficient of reflection (a) is given by the ratio of reflected wave to the voltage of incident wave of a transmission linedue to the travelling waves caused by switching surges. Coefficient of reflection a =Vr / Vi Where V r- is the reflected wave,Vi – is the incident wave.

15.What are the specifications of travelling wave?
A travelling wave is characterized by the four specifications Crest of a wave, Front of a wave, Tail of a wave & Polarity.

16.Define reflection and refraction.
Whenever there is an abrupt change in the parameters of a transmission line, such as an open circuit or a termination, the travelling wave undergoes a transition, part of the wave is reflected or sent back only a portion is transmitted forward. At the transition point (or) junction, the voltage or current wave may attain a value which can vary from zero to twice its initial valueThe incoming wave is called incident wave and the other waves are called reflected and transmitted (or) refracted waves at the transition point.

17.Define tail and polarity of a wave.
Tail: tail of the wave is a portion beyond the crest, It is expressed in time µs from beginning of the wave to the point. Where the wave has to reduced to 50% of its value at crest.
Polarity: It is polarity of crest voltage or current a positive wave of 500Kvcrest, 1 µs from time and 25 µs tail time will be represented as +500/1.0/25.0.

18.What is the principle of importance of Bewley's lattice diagram.
When a travelling wave reaches a terminal point it may be reflected and transmitted as well. When reflected wave reaches the initiator point, it is reflected form here and these reflections continue although there may occur attenuation of both voltage and current waves. Generally it becomes difficult ti keep track of this successive reflection, but with the use of Bewley's lattice diagram one can know at a glance the portion and direction of voltage and current waves of all successive reflects.

19. Express the equations for reflection coefficient.
Since the current reflection coefficient is $-\Gamma=+1$ in this case, the reflected current wave is in phase with the incident current wave, and the magnitude of the total current at the short circuit non-zero as expected.

20. Discuss about lumped parameters.
A lumped parameter model will consider the content of one equipment to be homogeneous; it will not consider radial or axial gradients in the fluid properties. A fully distributed model will consider the variation of fluid properties and interaction with its neighboring elements in all three dimensions and over time

21. List out the damages caused by the travelling waves.
The steep wave front of the surge may cause internal flashover between inter turns of the transformer. c. The high peak voltage of the surge may cause external flashover between the terminals of the electrical equipment which may result in damage to insulators.

22. Differentiate travelling waves and standing waves.

Travelling waves transport energy from one area of space to another, whereas standing waves do not transport energy. ... The most striking feature of standing waves is that they only occur for certain frequencies. Travelling waves on the other hand actually move from place to place, transporting energy.

23. Can traveling waves be used to generate standing waves?

In general, standing waves can be produced by any two identical waves traveling in opposite directions that have the right wavelength. In a bounded medium, standing waves occur when a wave with the correct wavelength meets its reflection. ... Standing waves are always associated with resonance.

24. What is the equation of a Travelling wave?

A traveling wave is described by the equation y(x,t) = (0.003) cos(20 x + 200 t), where y and x are measured in meters and t in seconds.

25. List the types of waves.

- Mathematical description.
- Wave in elastic medium.
- Sine waves.
- Plane waves.
- Standing waves.
- Physical properties.
- Mechanical waves.
- Electromagnetic waves.

PART-B

1. Explore the steps involved in Bewely's lattice diagram construction with an example.
2. Evaluate the value of current in a transmission line considering its series and shunt lumped parameters.
3. Discuss elaborately on reflection and refraction travelling.
4. Develop wave equation of travelling waves in transmission lines.
5. Describe the transient response of systems with series and shunt distributed parameters.
6. Describe briefly about standing waves and Standing Wave Ratio (SWR) and natural frequency.
7. Analyze the phenomenon of current interruption in a lumped capacitive circuit and a distributed constant transmission lines.
8. A long transmission line is energized by a unit step voltage 1.0 V at the sending end and is open Circuited at the receiving end. Develop the Bewley's Lattice diagram and obtain the value of the voltage at the receiving end after a long time. Take the attenuation factor α =0.8.
9. Explain multi-conductor system of travelling waves in transmission lines.
10. a)With neat diagrams discuss the behaviour of a travelling wave when it reaches the end of i)open circuited transmission lineii)Short circuited transmission line.

UNIT V TRANSIENTS IN INTEGRATED POWER SYSTEM

PART-A

1.What are the applications of EMTP?

- The EMTP is a comprehensive computer program designed to solve electrical transient problem in lumpy circuits, distributed circuits.
- This program is capable of solving steady state circuit problems.
- Transient analysis can be carried out in circuits with any arbitrary configuration of lumped parameters. (R,L & C)

2.Define kilometric fault.(or) short line fault .

Short circuit faults or kilometric faults occurring on a transmission line length between 0.5 to 5km are termed as short line faults or kilometric faults. A fault of this type imposes a highly heavy duty on the circuit breaker, there by selecting its interrupting ability.

3.Mention any four causes of switching surge.

a) Interruption of low inductive currents by high speed circuit breaker
b) Interruption of small capacitance current
c) Ferro resonance
d) Energization of loaded line

4.Define switching over voltage factor.

The peak value of the transient recovery voltage ITRV) can be very high.. In testing and standardization, the damping is expressed by the overvoltage amplitude factor , defined as the ratio between the transient peak value and the steady state value.

5.What are the effects of load rejection in power systems?

Suddenly load rejection on power systems causes the speeding up of generator prime movers. The speed governors and automatic voltage regulates will intervene to restore the normal conditions. Initially both the frequency and voltage increases.

6.What is the effect of switching surges in integrated power system?

The disturbance produced by the switching operation is modified by the interconnected system spreads through the system, setting up waves that travel along the lines and reflect to and from the open ends.

7.Distinguish between line dropping and load rejection.

Voltage drop or line drop in general , on transmission lines the voltage s]simply decreases as one moves from the substation out forward the end of distribution feeder. This change in voltage is known as line dropping.In real world, load rejection is when there is a faul on the transmission line which is sensed by the` protection system and trip the circuit breaker concern during that's tine the load connected with the feeder and lines are suddenly dropped (i.E) load throw off or load rejection occurs

8.write the shot notes on EMTP.

- The EMTP became popular for the calculation of power system transients especially a switching overvoltage from the viewpoint of insulation design and coordination of a transmission line and a substation in 1996.
- The EMTP development was a part of system analysis computerization including a power/load flow analysis program and a stability analysis program, before the EMTP, a transient network analyzer (TNA)was used.The EMTP was based on the method of travelling wave analysis in a Hydraulic system, well known as a water hammer.

9.Write the network calculation to model a transmission network of EMTP.

[G] [V(T)] = [I(T) – [I]] Where [G] is the nodal conductance matrix [V(T) is the node voltages
[I(T) is the vector of current sources
[I] is the vector of past history terms.

10.What are the potential advantages of EMTP?

EMTP is a comprehensive computer program defined to solve:

1. Electrical transient problems in lumpy circuits and distributed circuits
2. Steady- state circuit problems
3. Arbitrary configuration of lumped parameters
4. Distributed parameters, transposed (or) untransposed)

11.Mention the features of EMTP.

1. Sophisticated computer program for the simulation electromagnetic Electromechanical and control system transients in multiphase power systems.
2. Advanced model of electrical machines
3. Detailed and precise models of lines and cables
4. Complete model of transformers etc.

12.Which software do you suggested to solve electrical transient Problems?

EMTP- Electro Magnetic Transient Analysis Program

13.Mention the effects of transients when switch is closed?

When a switch is suddenly closed immediately prior to the circuit being completed, certain voltage across the switch contacts. At the moment the contacts made by pre striking discharge, this voltage appears

14.What is meant by EMTP?

The EMTP is a comprehensive computer program designed to solve Electrical transient problems in lumpy circuits, distributed circuits. This program is capable of solving steady state circuit problems, transients analysis can be carried out in circuits. Without any arbitrary configuration of lumped parameters(R,L&C)Transmission lines with distributed parameters, transposed or untransposed can be included in the network

15.Define switching over voltage factor?
The peak value of the transient recovery voltage (TRV) can be very high. In testing and standardization the damping power is expressed by the over voltage amplitude factor, is defined as the ratio between the transient peak value and the steady state value.

16. Define transmission coefficient.
The transmission coefficient is used in physics and electrical engineering when wave propagation in a medium containing discontinuities is considered. A transmission coefficient describes the amplitude, intensity, or total power of a transmitted wave relative to an incident wave.

17. Discuss about switching surges.
A switching surges is a short duration transient voltage produced in the system due to a sudden opening or closing of a switch or circuit breaker or due to an arcing at a fault in the system.

18.What is the difference between recloser and Sectionalizer?
Reclosers were used as active protection devices, who used their sensors to detect fault situations and trip their circuit breaker to interrupt the fault current. ... The key difference between a sectionalizer and a recloser, is that the former does not have the capability to break fault current.

19. Discuss about distribution of voltage in power system.
Primary distribution voltages range from 4 kV to 35 kV phase-to-phase (2.4 kV to 20 kV phase-to-neutral) Only large consumers are fed directly from distribution voltages; most utility customers are connected to a transformer, which reduces the distribution voltage to the low voltage "utilization voltage", "supply.

20. What is the purpose of using high voltages in power distribution systems?
The primary reason that power is transmitted at high voltages is to increase efficiency. As electricity is transmitted over long distances, there are inherent energy losses along the way. High voltage transmission minimizes the amount of power lost as electricity flows from one location to the next.

21. What are the standard transmission and distribution voltages?
Transmission-level voltages are usually considered to be 110 kV and above. Lower voltages, such as 66 kV and 33 kV, are usually considered subtransmission voltages, but are occasionally used on long lines with light loads. Voltages less than 33 kV are usually used for distribution.

22. What is meant by transmission and distribution system?
Transmission and distribution refers to the different stages of carrying electricity over poles and wires from generators to a home or a business. ... After electricity has been generated, a system of electrical wires carries the electricity from the source of generation to our homes and businesses.

23. What are the three main steps in power distribution?

The electrical power system consists of three major components: generation, a high voltage transmission grid, and a distribution system. The high voltage transmission system links the generators to substations, which supply power to the user through the distribution system.

24. What is static and current electricity?

The electricity which is build up on the surface of the substance is known as the static electricity. The current electricity is because of the flow of electrons. Causes. It induces because of the movement of the negative charges from one object to another.

25. How are switching over voltages originated in a power system?

The most common temporary overvoltages occur on the healthy phases of a system during phase-to-earth faults. Apart from being caused by dielectric faults or flashover, switching overvoltages appear in the power systems due to switching of load and/or fault currents, and they cannot be avoided.

PART-B

1.Discuss in detail about EMTP for the applications of transient computation.
2. Discuss about the distribution of voltage in a power system. Derive the voltage transient on closing lines.
3. Analyze the computation of Transients in power system using EMTP.
4. Examine the switching surges in a power system and also outline the concept of line dropping and load rejection in an power system.
5. Interpret the need for simulation studies. Also describe the key points of EMTP software and the steps involved to do a simulation study of a sample power system.
6. Develop an expression for response and recovery voltage of a shorted line.
7. Discuss the causes of transients on closing and reclosing of transmission lines.
8. Discuss in detail about the switching surges on an integrated power system.
9. Explain the voltage transients on closing and reclosing of lines and switching surges on integrated system.
10. Explore the algorithm used for computation of transient voltages in EMTP.